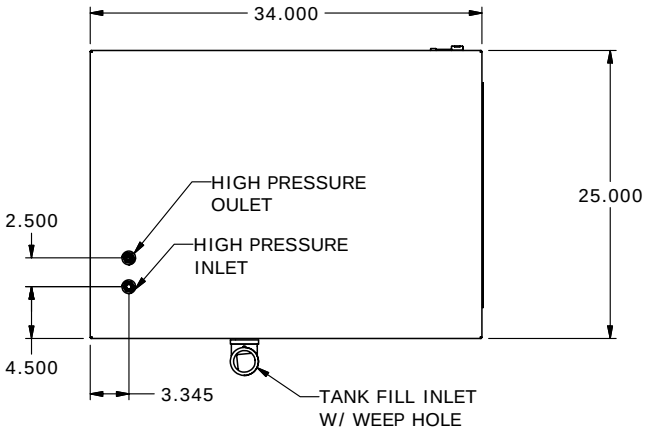

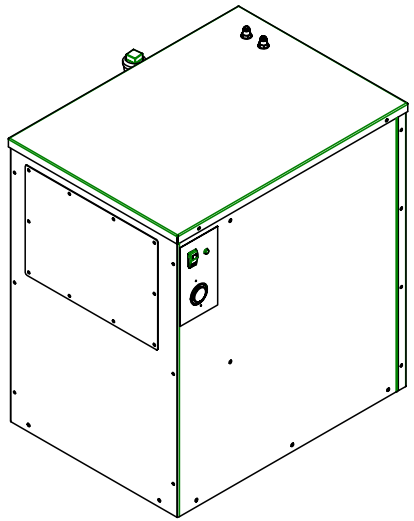

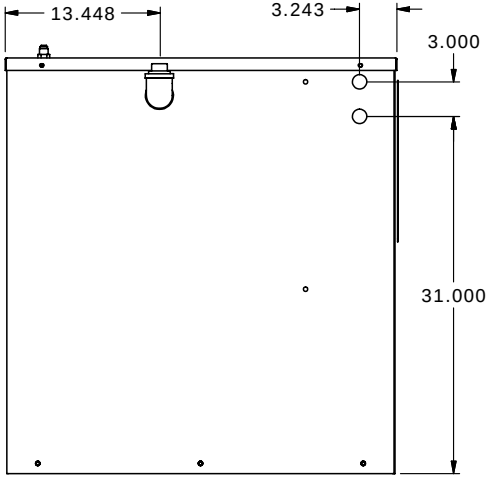

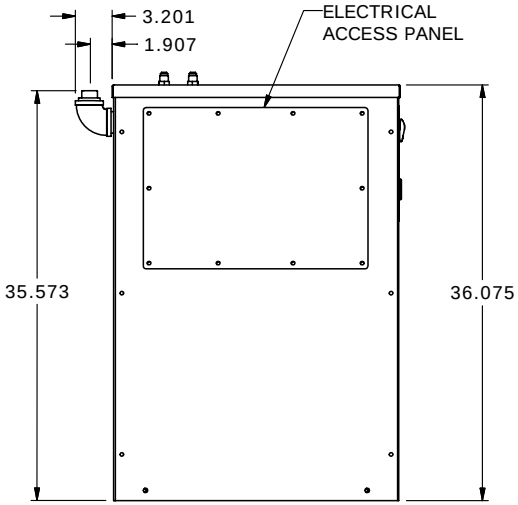

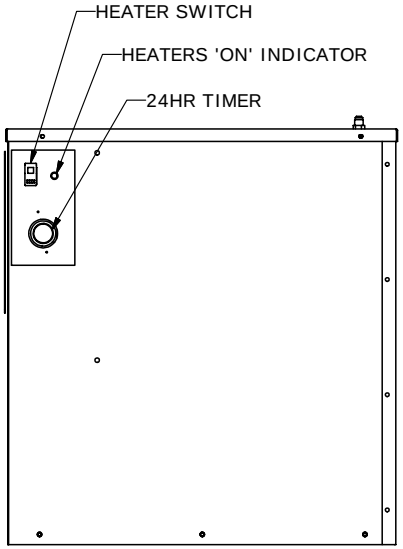

PART NUMBER	MATERIAL	PAINT SPEC.

REVISIONS

REV	DESCRIPTION	DATE	BY

LEGEND
△ NOTE ○ ITEM
⬡ REVISION

UNLESS OTHERWISE SPECIFIED:
DIMENSIONS ARE IN INCHES
TOLERANCES
LINEAR
FRACTION ± 1/4"
.XX ± .13
.XXX ± .030
.XXX ± .060 (TUBING)
ANGULAR
± 1.0°

KARCHER
CAMAS DESIGN FACILITY
4275 N.W. Pacific Rim Blvd.
Camas, Washington 98607
Ph. (360) 833-1600
Fax. (360) 833-9200

DRAWING DESCRIPTION

DRAWN BY:	DATE CREATED	MACHINE
CHECKED BY:	DATE	
APPROVED BY: shannon.taylor	DATE 4/7/2006	SCALE

DRAWING NUMBER | REV